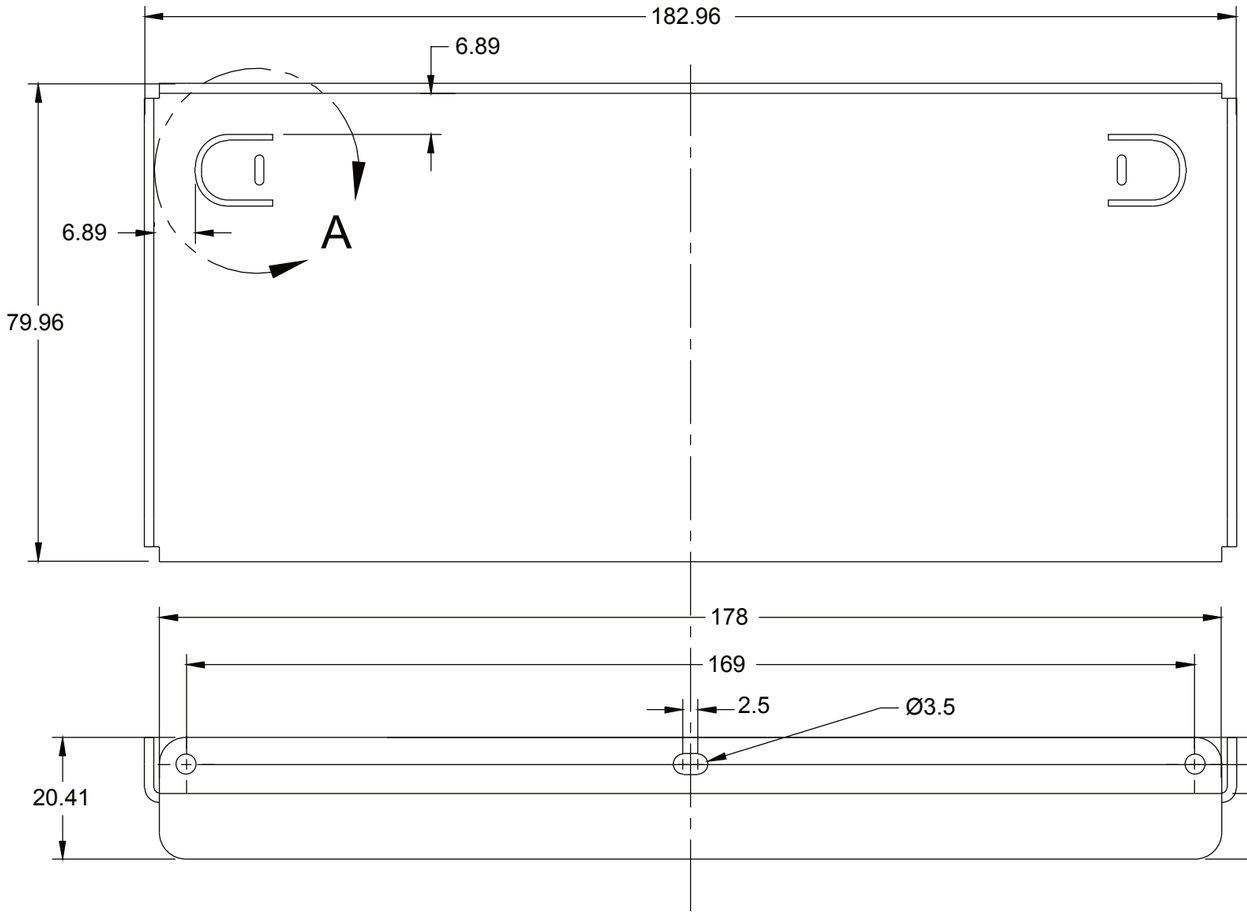

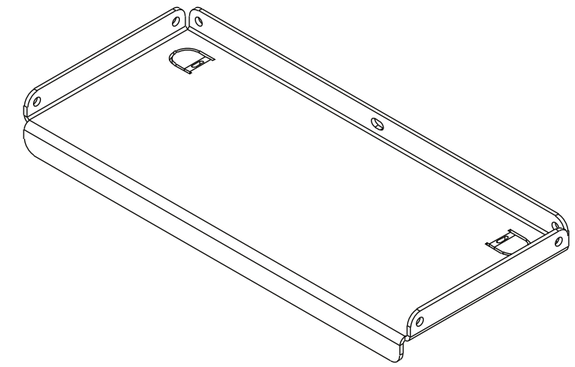

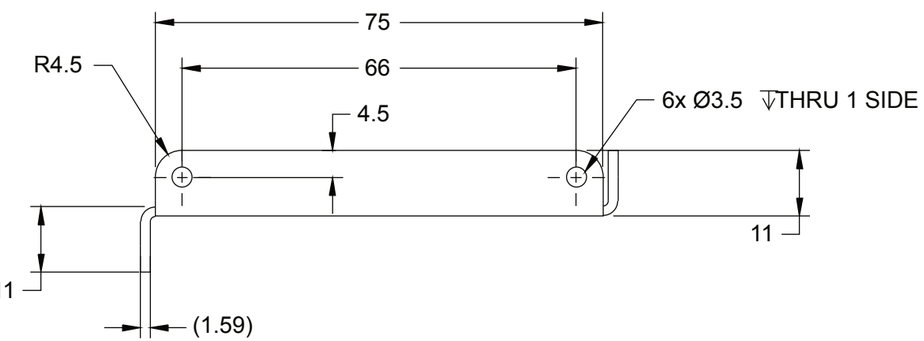

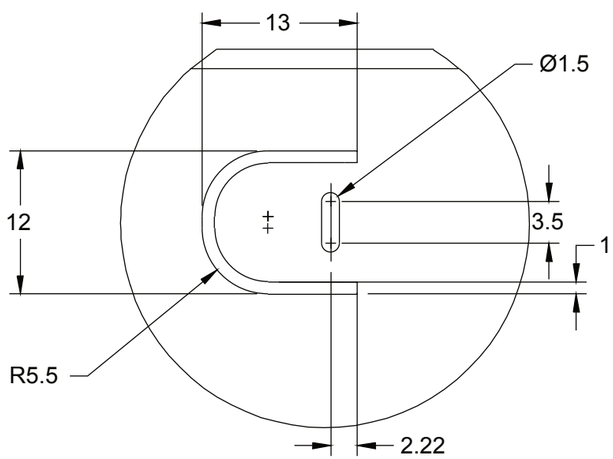

DETAIL A
2:1

ALL BENDS 90°

REVISION HISTORY		
REV	DESCRIPTION	DATE
00	RELEASE FOR PROTOTYPE	2026-02-12
01	ADDED 3MM TO OVERALL WIDTH	2026-03-12
02	REVISED DIMENSIONS	2026-03-24

cassetteshelf.com

PROJECT
cassetteshelf

TITLE
plate

MATERIAL: 1/16" Thick 5052 Aluminum (1.59mm)
(POWDER COATED: GLOSS WHITE)
UNITS: mm

APPROVED	SIZE	CODE	TOLERANCE	REV
CHECKED	B		±0.2mm for all dimensions ±0.1mm for all hole diameters ±1° for all angles	02
DRAWN Darius Laprise 2026-01-11	SCALE 1:1		WEIGHT	SHEET 1/1